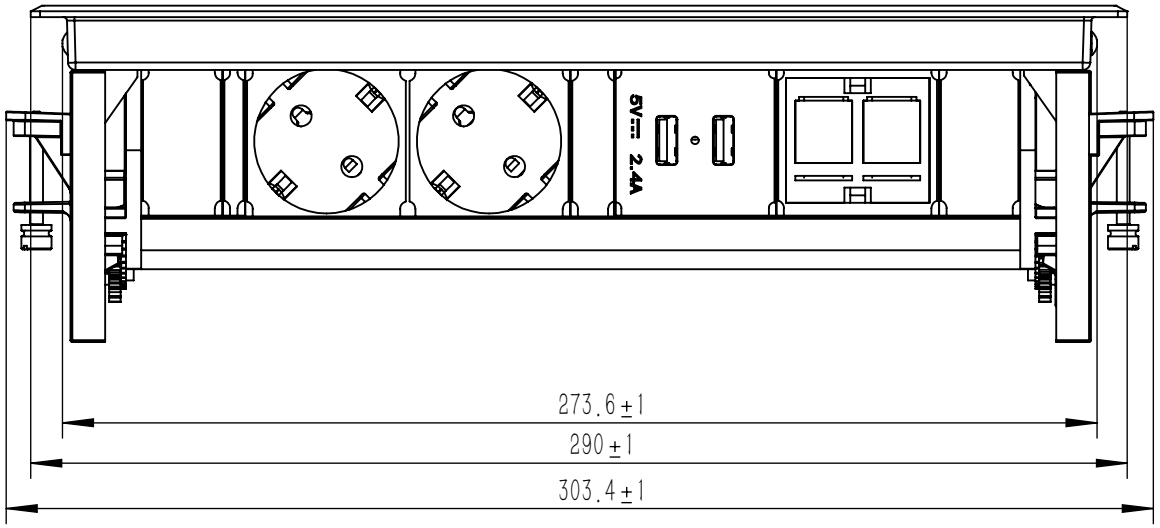

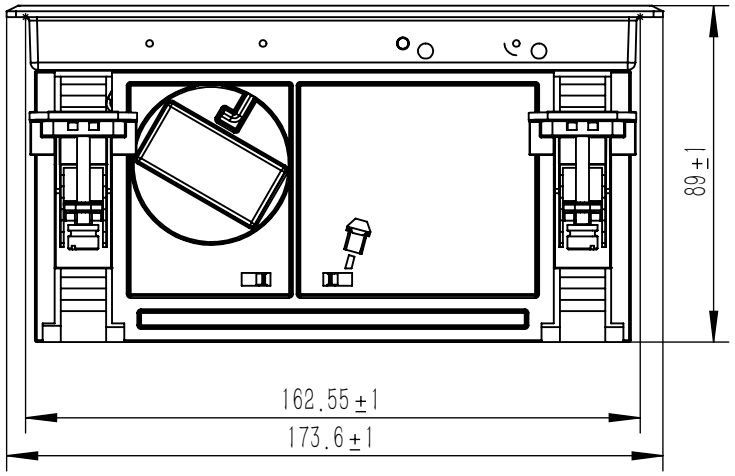

www.filex.nl

Filex
Workspace Solutions